BCSE 1527

IoT & Robotics Lab

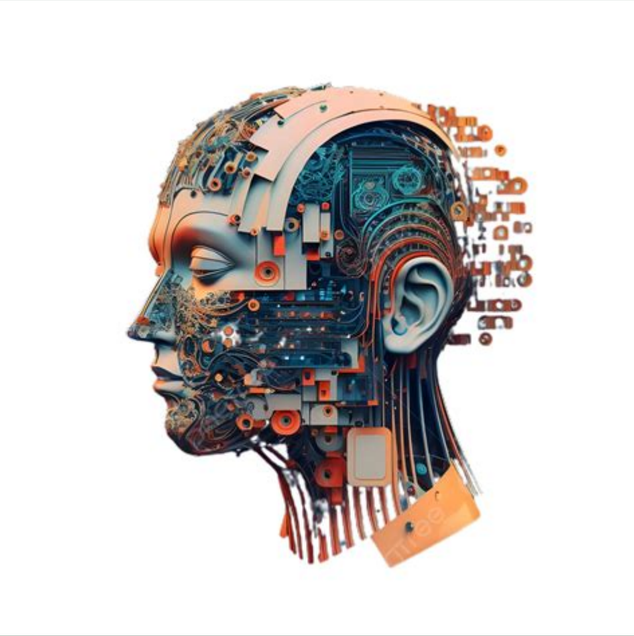

Mr. Rohit Sharma

TECHNOLOGY PROVIDER

ptc thingworx kepware CSED

TOUCH SENSOR INTERFACING WITH ARDUINO UNO R4 WIFI

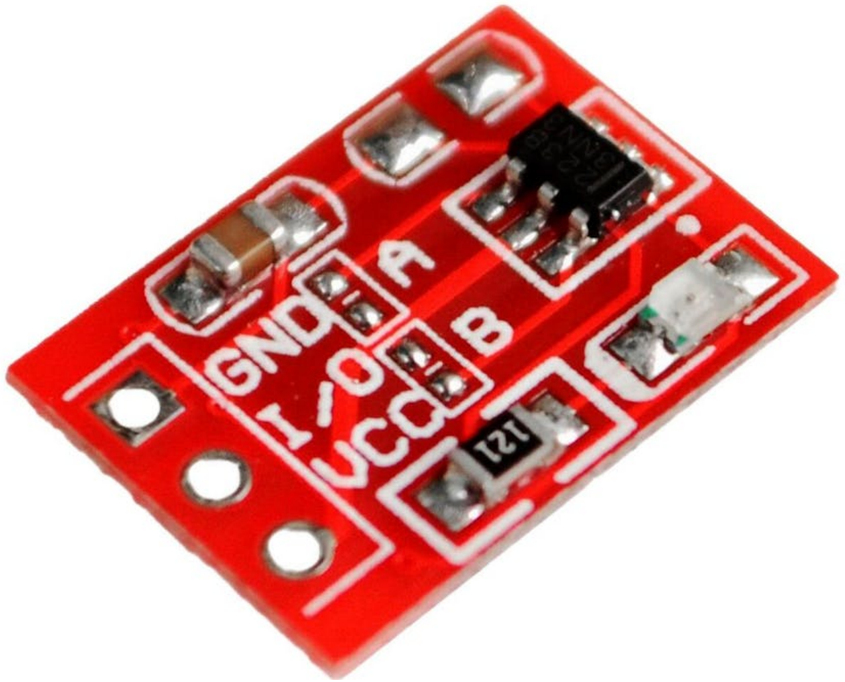

Overview:

- This activity introduces touch-based input using Arduino UNO R4 WiFi.
- Touch sensors are widely used as an alternative to traditional push buttons.

TOUCH SENSOR INTERFACING WITH ARDUINO UNO R4 WIFI

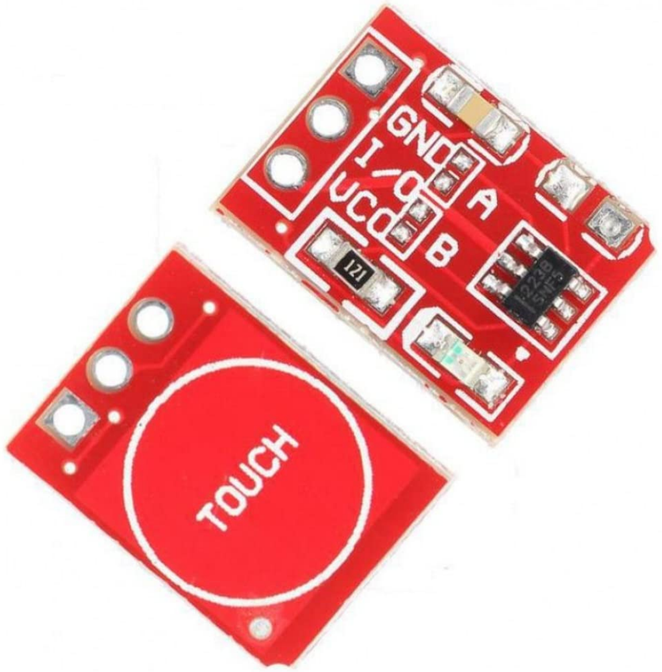

What we do in this activity:

- Interface a touch sensor with Arduino UNO R4 WiFi
- Detect touch input
- Control an LED using touch

TECHNOLOGY PROVIDER

ptc thingworx kepware CSED

Mr. Rohit Sharma

Component Used

- Arduino Uno R4 Wifi
- Capacitive Touch Sensor TTP223
- LED
- 220Ω Resistor
- Jumper Wires
- UST to C Type Cable

TECHNOLOGY PROVIDER

Working Principle of Touch Sensor

Capacitive Touch Sensor Working Principle:

- Touch sensors work on the principle of **capacitance**.
- The human body has natural electrical capacitance.
- When a finger touches the sensor pad:

A. The capacitance of the sensor increases
B. This change is detected by the sensor circuit
C. The output pin becomes HIGH

Output Behavior:

- Touch detected → HIGH
- No touch → LOW

How Touch Sensor Works with Arduino

Interfacing Concept:

The touch sensor output pin is connected to a digital input pin of Arduino.
Arduino reads the sensor state using digitalRead().
Based on the input, Arduino controls an actuator such as an LED or buzzer.

Data Flow:

Touch → Sensor → Arduino → Output Device

Pin Connections

Touch Sensor Connections:

- VCC → 5V (Arduino UNO R4 WiFi)
- GND → GND
- OUT → Digital Pin D3

LED Connections:

- Anode → D13(Control BuiltIn LED)
- Cathode → 220Ω Resistor → GND

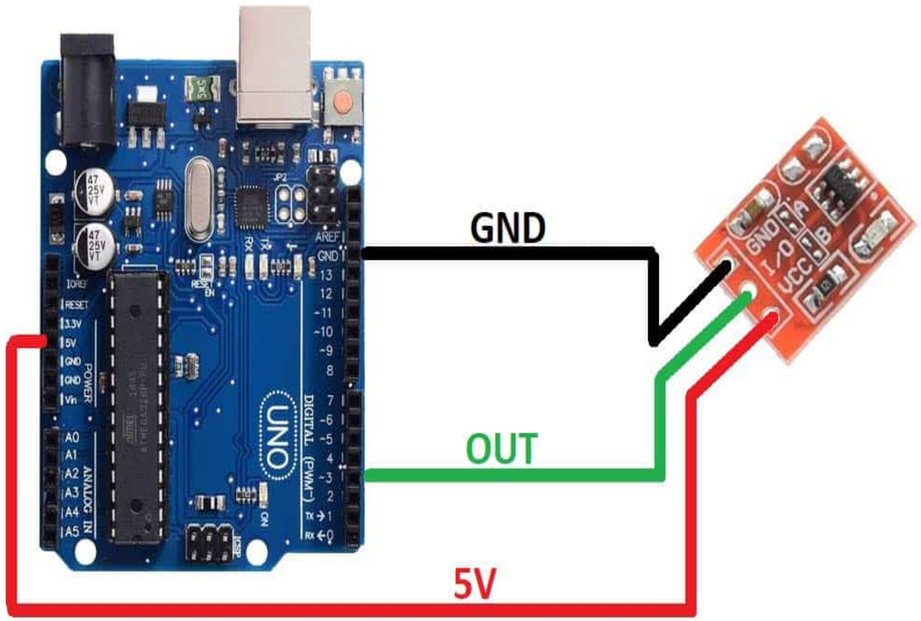

Code

```
int touchPin = 3;
int ledPin = 13;

void setup() {
  pinMode(touchPin, INPUT);
  pinMode(ledPin, OUTPUT);
  Serial.begin(9600);
}
```

Code

```
void loop() {
  int touchState = digitalRead(touchPin);

  if (touchState == HIGH) {
    digitalWrite(ledPin, HIGH);
    Serial.println("Touch Detected");
  } else {
    digitalWrite(ledPin, LOW);
    Serial.println("No Touch");
  }

  delay(200);
}
```

Sensor And Actuator Working

Sensor: Capacitive Touch Sensor
Actuator: LED

- The touch sensor detects human touch and sends a digital signal to Arduino.
- Arduino processes the input signal.
- The LED is turned ON or OFF based on the touch status.

Challenges faced during this Activity

- False triggering due to electrical noise
- High or low sensitivity of the touch sensor
- Loose or improper wiring
- Power supply fluctuations
- Delay causing slow response
- Environmental interference

Activities

- Touch-based LED toggle system
- Touch sensor controlled buzzer
- Touch-based relay or fan control
- Touch keypad system
- Password-based touch security system
- Touch sensor with LED matrix display
- WiFi-based touch controlled home automation

Tasks

- Implement LED toggle using touch
- Count number of touch events
- Control LED brightness using touch
- Display touch status on Serial Monitor
- Integrate touch sensor with WiFi control

Applications

- Touch lamps
- Smart switches
- Home automation systems
- Consumer electronics
- Smart control panels

Thanks!

Do you have any questions?

rohit.sharma@gla.ac.in
9873753135

Mr. Rohit Sharma

TECHNOLOGY PROVIDER